THIS DRAWING IS UNPUBLISHED. RELEASED FOR PUBLICATION
© COPYRIGHT By – ALL RIGHTS RESERVED.

REVISIONS					
P	LTR	DESCRIPTION	DATE	DWN	APVD
	Y3	REVISED PER ECR-15-014064	03MAR2016	NK	NL

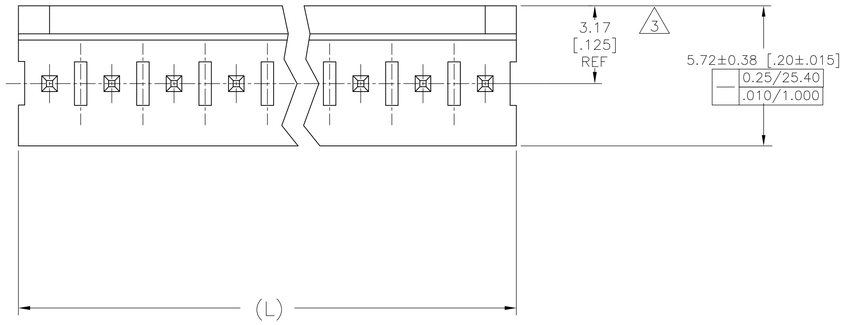

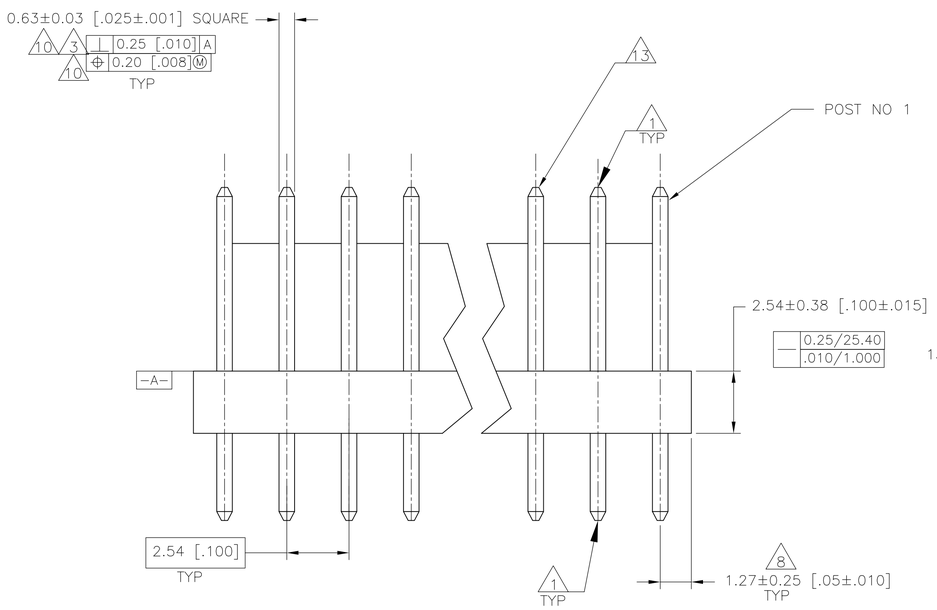

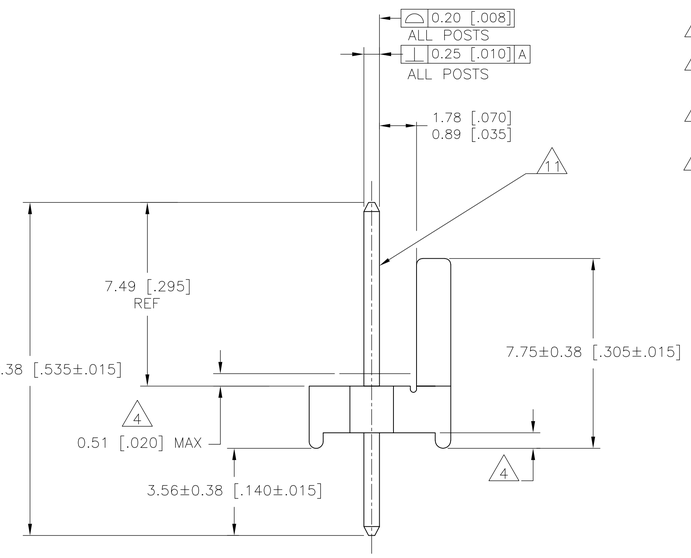

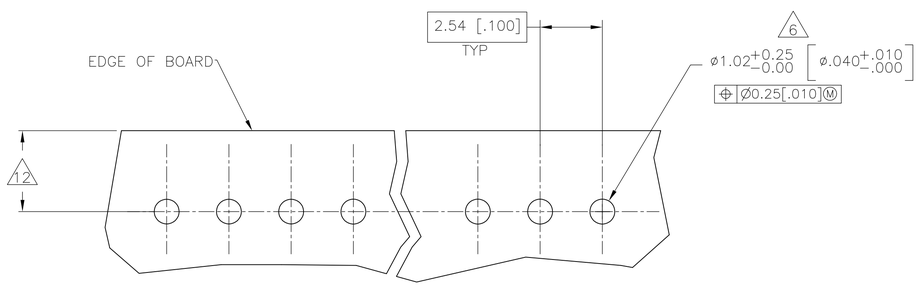

RECOMMENDED MOUNTING HOLE PATTERN
FOR 1.60 [.063] THICK P.C. BOARD 2

1. POST TO WITHSTAND 13 NEWTONS [3 LBS.] MIN. AXIAL FORCE IN BOTH DIRECTIONS SHOWN WITHOUT DISLODGING.
2. TOLERANCES APPLY TO SOLDER SIDE OF BOARD.
3. MEASURED AT SURFACE –A–
4. PLASTIC FLASH PERMITTED IN THIS AREA.
5. PARTS COMPLY WITH SOLDERABILITY SPEC. 109–11–2.
6. ONE HOLE MAY BE UNDERSIZED 0.81–0.89 [.032–.035] DIA. FOR ASSEMBLY RETENTION DURING WAVE SOLDERING.
7. MATERIAL: HEADER–THERMOPLASTIC POLYESTER UL94V–0 (NATURAL)
   POST–COPPER ALLOY (TIN–PLATED)
8. COORDINATE DIMENSION APPLIES FROM CENTER OF ACTUAL FEATURE.
9. PLASTIC BURRS CAUSED BY CUT–OFF TOOLING ARE PERMITTED WITHIN THE MAXIMUM TOLERANCE ENVELOPE.
10. POSTS TO BE MEASURED WHEN STRIP IS HELD FLAT.
11. POSTS MUST WITHSTAND TWO 90° BENDS AGAINST EXTRUSION WITHOUT BREAKING.
12. DIMENSION SHOULD BE 3.30 [.130] WHEN MATING WITH A MTA–100 CONNECTOR ASSEMBLY OR A CST–100 CONNECTOR.
13. PIN BURR OF 0.13 [.005] MAX. VERTICAL AND 0.08 [.003] MAX. HORIZONTAL PERMITTED AT POST TIPS ON BOTH ENDS.

MM	[IN]	NO OF POSITIONS	PART NUMBER
L			
71.12	2.800	28	2–640454–8
68.58	2.700	27	2–640454–7
66.04	2.600	26	2–640454–6
63.50	2.500	25	2–640454–5
60.96	2.400	24	2–640454–4
58.42	2.300	23	2–640454–3
55.88	2.200	22	2–640454–2
53.34	2.100	21	2–640454–1
50.80	2.000	20	2–640454–0
48.26	1.900	19	1–640454–9
45.72	1.800	18	1–640454–8
43.18	1.700	17	1–640454–7
40.64	1.600	16	1–640454–6
38.10	1.500	15	1–640454–5
35.56	1.400	14	1–640454–4
33.02	1.300	13	1–640454–3
30.48	1.200	12	1–640454–2
27.94	1.100	11	1–640454–1
25.40	1.000	10	1–640454–0
22.86	.900	9	640454–9
20.32	.800	8	640454–8
17.78	.700	7	640454–7
15.24	.600	6	640454–6
12.70	.500	5	640454–5
10.16	.400	4	640454–4
7.62	.300	3	640454–3
5.08	.200	2	640454–2

THIS DRAWING IS A CONTROLLED DOCUMENT.

DIMENSIONS: mm [INCHES]

TOLERANCES UNLESS OTHERWISE SPECIFIED:
0 PLC ±
1 PLC ±
2 PLC ±
3 PLC ± 0.13 [.005]
4 PLC ±
ANGLES ± 0°30'

MATERIAL 7
FINISH 7

DWN S. HAMM 09–NOV–2001
CHK D. BOSSI 09–NOV–2001
APVD D. BOSSI 09–NOV–2001
PRODUCT SPEC —
APPLICATION SPEC —
WEIGHT —

TE Connectivity

NAME MTA–.100 HDR ASSY, POLARIZED, NOTCHED, .025 SQUARE STRAIGHT POST, TIN PLATED

SIZE	CAGE CODE	DRAWING NO	RESTRICTED TO
A1	00779	C–640454	—

CUSTOMER DRAWING SCALE 8:1 SHEET 1 OF 1 REV Y3